ATEST GAZ

User Manual

Bus Controller

MOD BUS Creator

Product code: PW-120-X

POD-063-ENG R05

ATEST GAZ

Reliable and Innovative Gas Detection & Safety Systems

We design, manufacture, implement and support:
Systems for Monitoring, Detection and Reduction of gas hazards

We invite you to familiarize yourself with our offer on **www.atestgaz.pl**

Atest Gaz A. M. Pachole sp. j.
ul. Spokojna 3, 44-109 Gliwice
Poland

tel.: +48 32 238 87 94
fax: +48 32 234 92 71
e-mail: contact@atestgaz.pl

www.atestgaz.pl

Remarks and reservations

- Connection and operation of the device is allowed only after reading and understanding the contents of this document. Keep User's Manual with the device for future use.
- The manufacturer bears no responsibility for errors, damages and failures caused by improper selection of devices and cables, improper installation or failure to understand the contents of this document.
- Unauthorised repairs and modifications of the device are not allowed. The manufacturer bears no responsibility for the results of such interventions.
- Excessive mechanical, electrical or environmental exposure may result in damage to the device.
- Use of damaged or incomplete devices is not allowed.
- The design of the Gas Safety System for a protected facility may involve other requirements throughout all stages of the product life.

How to use this manual?

- The following symbols of optical indicators status are used throughout the document:

Symbol	Interpretation
●	Optical indicator on
⊘	Optical indicator flashing
○	Optical indicator off
⊙	Optical indicator status not determined (depends on other factors)

Table 1: Optical indicators status notation

- Important parts of the text are marked as follows:

⚠ Pay special attention to information given in these fields.

- User's Manual consists of main text and appendices. Appendices are independent documents and can exist without User's Manual. Appendices have their own page numbering independent of User's Manual page numbering. These documents can also have their own tables of contents. All documents included in the User's Manual are marked in the bottom right corner with their name (symbol) and revision (issue number).

Table of contents

List of tables

List of figures

1 General information

The crucial requirements to industrial systems for gas detection is to assure its uninterrupted operation is spite of possible external hazards to integration thereof. A failure on power supply lines may lead to short circuit faults and, in consequence, to failure of power voltage supply to entire system or to long-term sparking, which is extremely hazardous in areas with potentially explosive atmospheres due to presence of flammable gases. In turn, defect on a transmission line only in a single point may lead to complete destruction of communication between individual components of the gas monitoring system.

The Bus Controller MOD BUS Creator is designed to partly resolve the foregoing problems by structuring (chopping) an entire system into small portions with an isolated local data bus in each portion. Such local sections of the data transmission bus can operate, depending on the device option, according to the RS-485 standard interface (PW-120-485 unit) or Teta interface (PW-120-T unit). Each local section of the data bus has its separate, adjustable protection means for protection against overloads and voltage surges and is provided with logic separation for data transmission lines.

In case of a physical defect of a data bus wire or a failure of any device connected to a bus section governed by MOD BUS Creator only a portion of the system is endangered to become inoperable. The control module carries out validation and filtration of data received from the data bus and cuts off power voltage if a short fault or sparking takes place.

In addition, the Field BUS port of the device offers enhanced immunity to electromagnetic interferences (in particular, voltage surges), hence systems that use that port for field communication are better protected against consequences of surged caused, for instance, by lightning effects.

1.1 Operation principle

The module continuously monitors status of Field BUS lines by measuring voltages, currents and rates, how often transmission frames with erroneous format are transmitted down data bus lines.

When a threshold limit set up by a user for electric current is exceed, the unit is switch over to the operation mode of a current supply source. If the mentioned threshold is exceeded for one second or more, power voltage for the data bus is completely cut off and an error is reported to the control system. The device also performs periodical checks of the data bus resistance. Upon the overload status on the data bus spontaneously disappears, the power voltage is automatically restored with no need for an operator intervention.

In spite of a short fault or sparking between data lines and power supply line, data frames are received by destination devices in a undisturbed format and construed as correct ones. The MOD BUS Creator enables data separation on the logic level, since it receives characters as data frames, verified formats of frames and resends the frames with filtration of interferences or distortions. In addition, the rate of defective frames at the side of Field BUS lines is measured. Eventually, if the permissible limit for percentage of defective frames (data packages) is exceeded, the transmission between Field BUS and Internal BUS is completely interrupted and a failure is reported. The failure status expires after the undisturbed communication is restored.

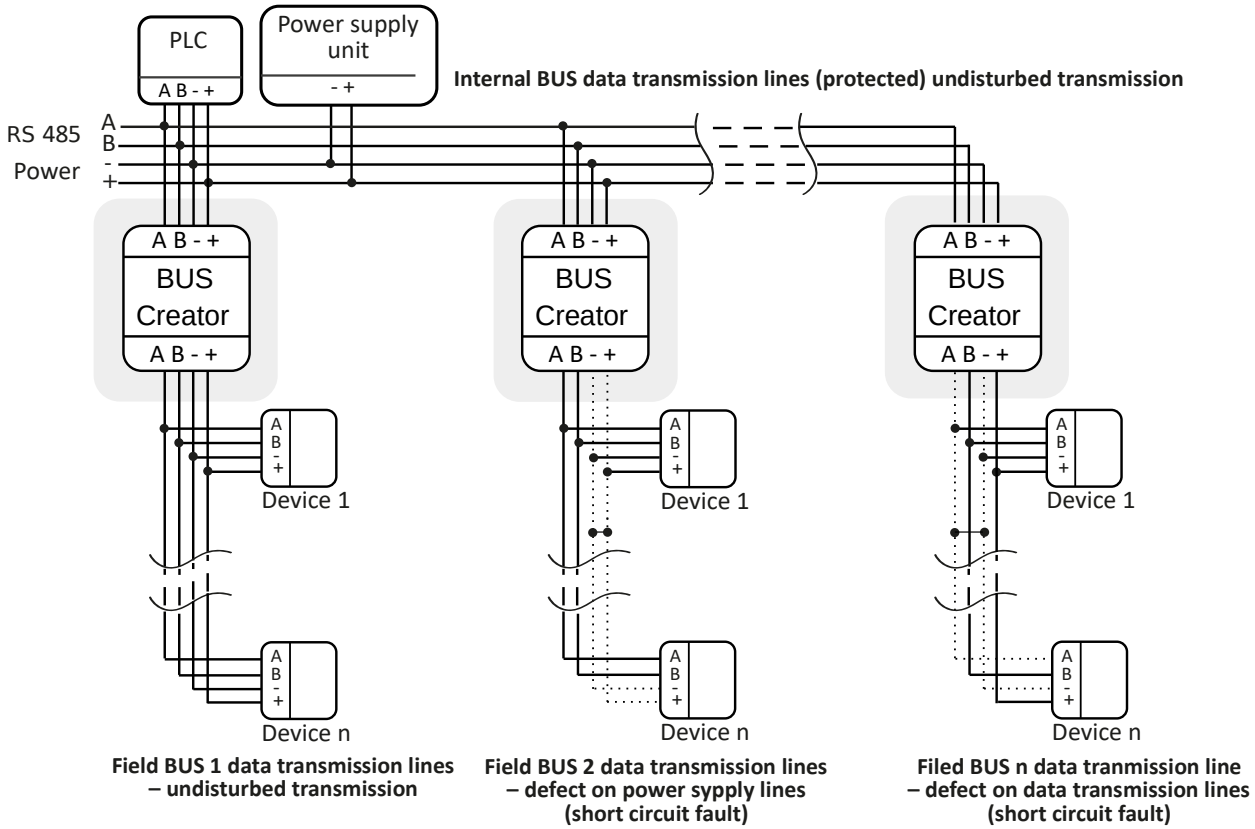

Figure 1: Application diagram of the bus controller

2 Safety

All activities related to connecting detectors, signallers and other system components must be carried out while Control Unit's power supply is off.

Although switching power supply of the Gas Detection and Safety System off, there is a possibility that a dangerous voltage can exist on the terminals of the control unit. It can originate from another system like for an example ventilation system that uses one of the output pins of control unit.

When performing repair, building and maintenance works, secure the device in a proper way.

Before painting the floors, make sure the device is secured.

3 Description of the construction

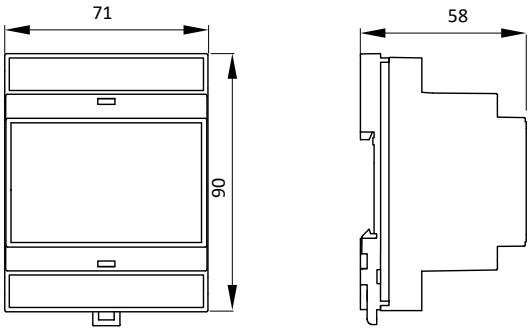

Figure 2: The construction of the device and its dimensions

4 Input-output interfaces

4.1 Electric interface

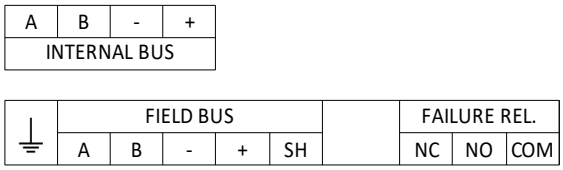

Figure 3: Electric connections

Name	Terminal	Description
INTERNAL BUS		Port for system communication to exchange data with the controller and the Field BUS port – details see section 4.1.1
	A	Signal line A (RS+)
	B	Signal line B (RS-)
	-	Negative
	+	Positive
⏚		Earthing terminal (connection to a local earthing is recommended to achieve reliable protection against voltage surges)
FIELD BUS		Communication port for devices connected to the Field BUS lines – see details in Section 4.1.2
	A	Signal line A (RS+). Not used for Teta BUS interface
	B	Signal line B (RS-). Not used for Teta BUS interface
	-	Negative
	+	Positive
	SH	Cable shield to be connected to an earthing terminal inside the device
FAILURE REL.		Port for a failure relay – see details in Section 4.1.3
	NO	Normally open contact of the relay
	NC	Normally closed contact of the relay
	COM	Common contact of the relay

Table 2: Specification of the terminal block

4.1.1 Internal BUS data port

It is the port that serves also as a power supply connection for the device. The communication standard for the port is RS-485. The port is located at the safe side of the device, i.e. not exposed to damage.

4.1.2 Field BUS data port

That port also provides outputs of power supply voltage. The communication standard for the port is RS-485 or Teta BUS. The port is located at the field side of the device, i.e. exposed to possible damage.

4.1.3 Relay output for failure indication

There are two possible states of relay output: device in operation or aggregated failure. Device in operation state is active when device is powered on, passing self-tests, correctly configured, current is below threshold and there are no distorted data frames on Field BUS. The two possible states are shown on figure below.

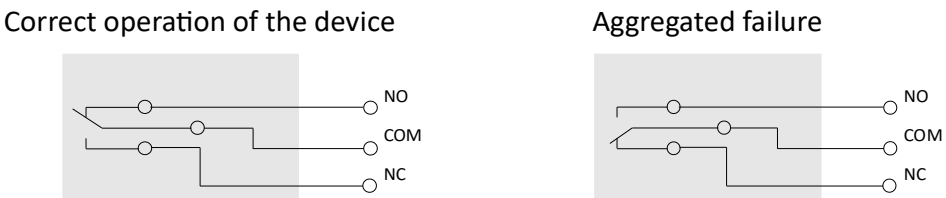

Figure 4: Possible states of relay output

5 User interface

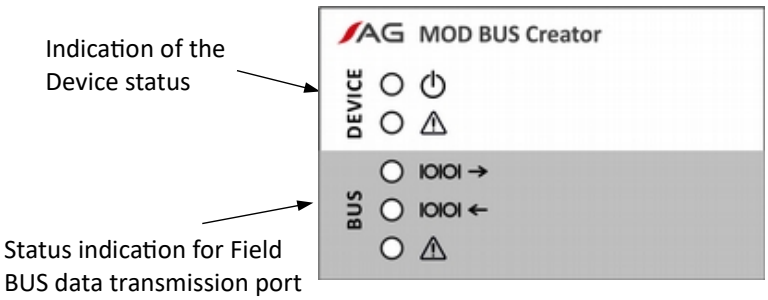

Figure 5: Front panel

5.1 DEVICE area

Indicator	Status / colour	Information
⏻	● / green	Current operation of the device
	◐ / green	Continuous blinking – device in configuration mode
	○	Failure
⚠	◐ / yellow	1 blink – incorrect configuration
	◐ / yellow	2 blinks – incorrect supply voltage
	◐ / yellow	Continuous blinking – internal overheating
	● / yellow	Other failures of device

Table 3: Information provided by DEVICE indicators

5.2 BUS area

Indicator	Status / colour	Information
IOIOI →	○	No data transmission to the Field BUS port
	◐ / green	Information is transmitted to the Field BUS port
IOIOI ←	○	No data transmission from the Field BUS port
	◐ / green	Information is received from the Field BUS port
⚠	○	Data lines of the Field BUS port are OK (no failure)
	◐ / yellow	Continuous blinking – high intensity of distorted data frames received by the Field BUS port although no overload or short fault on the power supply outputs are detected.
	● / yellow	Overload status or a short fault is detected on the power supply outputs.

Table 4: Information provided by indicators of the BUS area

6 System architecture

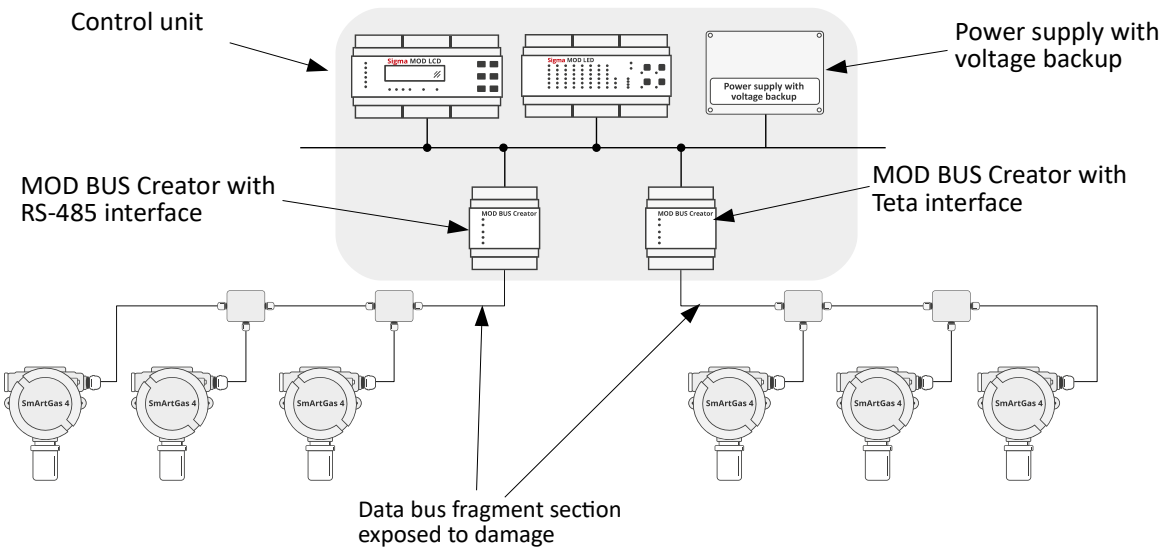

Figure 6: Example of a system layout

7 Life cycle

7.1 Transport

The device should be transported in the same way as new devices of this type. If the original box or another protection (e.g. corks) is not available, it is necessary to secure the device against shocks, vibrations and moisture on one's own, using other equivalent methods.

Transport of the device should be carried out under the environmental conditions described in the Table 10.

7.2 Installation

Mount in the control cabinet on the DIN 35 rail or place in the junction box in a place accessible to authorized operators, however, if possible, in such a way as to make it difficult for unauthorized persons to access it. It is recommended to use such mounting height which allows easy access to the unit.

If multi-wired strands (commonly referred to as "cables") are used for connecting, the ends of these strands

shall be terminated with terminal sleeves.

It is unacceptable to combine in one connector two wires which are not pinched in one cable lug (details see in Table 10).

Do not place the cable reserve in the device.

Do not leave disconnected cables inside the device.

Incorrect cable routing can lead to reducing the device's immunity from electromagnetic interference.

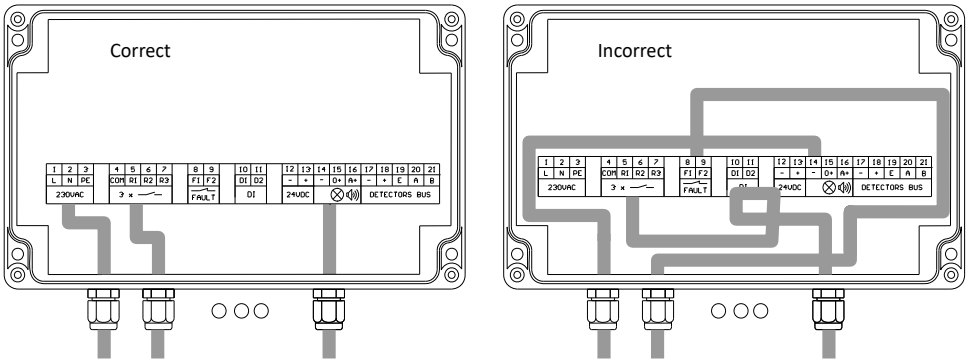

Figure 7: Example connection of cables to the device

7.3 Start-up

No additional commissioning or start-up procedures are needed. The only requirement is to configure the device according to instructions provided in Section 7.4.

7.4 Configuration of the device /system

The basic configuration of the device is carried out by means of two sets of microswitches (two dip-switches) (SW1 and SW2) as shown in Figure 8.

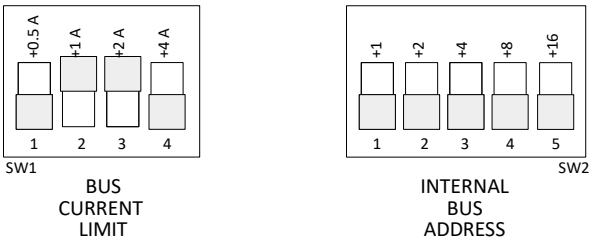

Figure 8: Example of the device configuration (bus current limit is set to 3A, the device address is 0)

All other settings are possible by software and relevant commands can be sent via the serial bus.

If any setting parameter received by the device is out of permissible range a configuration error is reported and power voltage normally supplied down Field BUS lines is shut off.

7.4.1 Current limits of Field BUS lines

Users are allowed to set a limiting threshold for electric current on Field BUS lines. The limit is equal to the sum of limits assigned to individual switches that are asserted within the SW1 set. When the limit threshold is exceeded, the device reports detection of a short-circuit fault on Field BUS.

Maximum permissible limits of current:

- 0.5 to 5 A for RS-485 transmission,
- 0.5 to 3 A for Teta transmission.

The device shall operate smoothly and without undesired shutdowns when thresholds are properly adjusted to a specific system and equipment connected to Field BUS lines.

- The threshold must me not less than 130% of the maximum totalized consumption of electric current for all devices connected to the Field BUS lines averaged for the time interval of 100 ms.
- The threshold must be less than the minimum short circuit current (power supply voltage over the total resistance of all power supply lines).
- The power supply unit for the system must provide at least 30% of power redundancy above the total maximum power of all MOD BUS Creator units within the entire system. A power supply unit with less power can also be applied but only in case when probability of a short-circuit fault on more than a single Field BUS output lines is very low. If so, the power redundancy must be at least 30% of power consumed by the largest load within the entire system.

7.4.2 Limits for devices connected to the Field BUS

- Connecting devices that draw current in an impulsive manner to the Field BUS should be avoided. If devices outside of the Atest Gaz offering are connected to the bus, make sure that they do not cause voltage oscillations.
- Total input capacitance of all devices connected to the bus section must not exceed C_{max} = threshold_limit*2000µF.

7.4.3 Operation modes

The MOD BUS Creator unit can operate in various modes, depending on its address settings assigned during configuration. The address is calculated as a weighted sum of all asserted microswitches within the SW2 group and may range from 0 (all switches in the bottom positions) up to 31 (all switches asserted, i.e. in the top position).

- address ‘0’ – transparency mode – all data pass through the device with no modification but the device enables galvanic separation of shorts and eliminates distorted data frames (with improper format),
- address ‘31’ – troubleshooting and configuration mode – makes it possible to set up parameters for the transparency mode and enabled the Modbus RTU server to access troubleshooting details available at the Internal BUS port (transmission parameters are the following: rate of 9,600 bauds, 8 data bits, no parity, one stop bit). These data are not transferred between Field BUS and Internal BUS ports,
- other addresses – reserve for future developments.

7.4.4 Transmission parameters for ports

Users are allowed to select a desired data format (transmission rate, number of data bits, parity details, number of stop bits) individually for each port. The MOD BUS Creator unit is capable of making conversion between the two selected data formats when information is transferred between these ports. The data formats are selected during configuration and appropriate settings are written at associated addresses of the embedded non-volatile memory of the controller – see Table 8. Since data transmission settings are stored in a non-volatile memory, the selected configuration is preserved even in case of power failure.

When any devices connected to the Field BUS lines are tuned so that they use different data formats it is possible to deactivate some mechanisms of data verification – see details in Table 9. If so, even data frames that are not compatible with the selected data format are considered as correct ones and allowed to pass through the controller between the data ports.

7.5 Troubleshooting

Troubleshooting details can be read by a Modbus server from the address 31 – see details in Section 7.4 and 9.

7.5.1 Maintenance

The external part of the enclosure should be cleaned by means of a soft cloth moistened with water.

7.6 Utilization

This symbol on a product or on its packaging indicates that the product must not be disposed of with other household waste. Instead, it is the user's responsibility to ensure disposal of waste equipment by handing it over to a designated collection point for the recycling of waste electrical and electronic equipment. The proper recycling of your waste equipment at the time of disposal will help to conserve natural resources and ensure that it is recycled in a manner that protects human health and the environment. Information about relevant designated collection points can be obtained from the Local Authority, waste disposal companies and in the place of purchase. The equipment can also be returned to the manufacturer.

8 Memory map

The memory map assumes number of memory addresses from ‘1’. It means that the address 40001 corresponds to the first word (2 bytes) of Holding Registers.

U8 stands for an unsigned 8-bit number, U16 – for an unsigned 16-bit number and U32 – unsigned 32-bit number.

Field no.	Addresses		Description	Permissions
	from	to		
1	40001	40011	Device status	Read only
2	40012	40022	Device configuration	Read and write

Table 5: Memory map – device status

8.1 Device status

Address	Type	Name	Description
40001	10x U8	DEV_TYPE	Identifier of the device type 'BusCreator'
40006	U16	DEV_FW_R	Low byte: firmware revision
		DEV_FW_V	High byte: firmware version
40007	U16	IB_VOLTAGE	Voltage measured on the Internal BUS power supply lines [mV]
40008	U16	FB_VOLTAGE	Voltage measured on the Field BUS power supply lines [mV]
40009	U16	FB_CURRENT	Current measured in the Field BUS power supply lines [mA]
40010	U16	FB_POWER	Total power supplied to the Field BUS client devices [W]
40011	16 bits	STATUS	Status register, see Table 7

Table 6: Memory map – status information about the MOD BUS Creator

8.1.1 STATUS register

Bit	Flag	Events that trigger setting of the flag bit
0	ERR_OVERCURR	Overload is detected on Field BUS lines
1	ERR_DATA	Problems with data integrity on Field BUS lines
2	ERR_FAILURE	Hardware defect, internal operability test failed
3	ERR_CONFIG	Improper configuration of the device
4	ERR_SUPPLY	Permissible range of power voltage on Internal BUS lines exceeded
5	ERR_OVERHEAT	Device overheated
6 – 15		Spare

Table 7: Memory map – STATUS register

8.2 Configuration of the device

Address	Type	Name	Description	Default value
40012	U32	IB_BAUD	Transmission rate for Internal BUS [bauds] Permissible rates with the deviation <1.2%: 1000, 1200, 2400, 4800, 9600, 19200, 38400, 57600, 115200 bauds	19200
40014	U16	IB_NO_BITS	Number of data bits per a single character 7 – 7 bits 8 – 8 bits	7
40015	U16	IB_Parity	Parity checking for Internal BUS 0 – No parity check – possible only for the character length of 8 bits 1 – EVEN parity 2 – ODD parity	1
40016	U16	IB_STOP_BITS	Number of stop bits 1 – 1 stop bit 2 – 2 stop bits	1
40017	U32	FB_BAUD	Transmission rate for Internal BUS [bauds] Permissible rates with the deviation <1.2%: 1000, 1200, 2400, 4800, 9600, 19200, 38400, 57600, 115200 bauds	19200

Address	Type	Name	Description	Default value
40019	U16	FB_NO_BITS	Number of data bits per a single character 7 – 7 bits 8 – 8 bits	7
40020	U16	FB_Parity	Parity checking for Internal BUS 0 – No parity check – possible only for the character length of 8 bits 1 – EVEN parity 2 – ODD parity	1
40021	U16	FB_STOP_BITS	Number of stop bits 1 – 1 stop bit 2 – 2 stop bits	1
40022	U16	FB_BER_TRESH	Minimal promil of bytes not passing verification which results in Field BUS fault	100
40023	U16	FB_CONS_TRESH	Minimal quantity of consecutive bytes not passing verification which results in Field BUS fault	200
40024	16 bits	FB_DVCS	Field BUS Data Validation Checker Settings – parameters to be verified to find out whether the received character is correct – see Table 9	

Table 8: Memory map – device configuration

8.2.1 FB_DVCS register

Bit	Flag	Consequences of the bit setting	Default value
0	PARITY_ERROR	Parity of a received character is verified	1
1	NOISE_ERROR	Every bit of the character is verified to detect unexpected toggle of its logic level	1
2	FRAMING_ERROR	Number of received stop bits is verified	1
3	BLOCK_INCORRECT	Characters will not be forwarded from Field BUS to Internal BUS if they are not passing verification or if Field BUS is in fault state	1
4 – 15		Not used	0

Table 9: Memory map – FB_DVCS register

9 Technical specification

Power supply • V_{CC} • Maximum current consumption from Internal Bus • Maximum power consumption by device, excluding Field Bus	 12 – 50 V ⎓ PW-120-485: 6.5 A PW-120-T: 4 A 0.6 W
Environment • Ambient temperatures • Humidity • Pressure	 -20 – 40°C 10 – 90% long term 0 – 99% short term 1013 ± 10% hPa
IP	IP 20
Digital output parameters • Relay	 Floating contacts, NO/NC AC1[2]: 50 V ~ / 0,5 A DC1: 50 V ⎓ / 0,5 A Not protected

Digital communication parameters
• Internal BUS port
  • Electric standard
  • Communication protocol
  • Transmission rates
  • Parity
  • Number of bits
• Port Field BUS
  • Electric standard
  • Communication protocol
  • Transmission rates
  • Parity
  • Number of bits
	
	RS-485
	Any, Modbus RTU (depend of device configuration)
	1 000, 1 200, 2 400, 4 800, 9 600, 19 200, 38 400, 57 600, 115 200 Bd
	No parity / even parity/ odd parity
	7/8
	
	RS-485 lub Teta BUS (depend of device version)
	Any, Teta BUS (depend of device version)
	1 000, 1 200, 2 400, 4 800, 9 600, 19 200, 38 400, 57 600, 115 200 Bd
	No parity / even parity/ odd parity
	7/8

Enhanced immunity to electromagnetic interferences • Field BUS port	 Immunity to electric surges: 4 kV line-to-earth surges, ± 1.25 kV line-to-line surges acc. to PN-EN 50270:2015 Mandatory condition: earthing terminal connected to an earthing circuit
Integrated signalling equipment (visual)	LED controls
Protection class	III
Dimension	See Figure 2
Cable glands (cable diameter range)	0.08 – 2.5 mm^2 (cable lugs 2 x 1 mm^2 or 2 x 0.75 mm^2 should be used for double wires)
Enclosure material	Self-extinguishing PPO
Weight	0.3 kg
Mounting	DIN-35 / TS35

Table 10: Technical specification

2 EN 60947 – Low-voltage switchgear and controlgear.

10 Product marking

Product code	Device
PW-120-485	MOD BUS Creator Bus Controller with RS-485 interface
PW-120-T	MOD BUS Creator Bus Controller with Teta interface

Table 11: Method of product's marking

11 Appendices

[1] DEZG137-ENG – EU Declaration of Conformity – MOD BUS Creator

EU Declaration of Conformity

Atest Gaz A. M. Pachole sp. j. declares with full responsibility, that the product:

(Product description)	(Trade name)	(Type identifier or Product code)
Bus Controller	**MOD BUS Creator**	**PW-120-X**

complies with the following Directives and Standards:

- in relation to Directive 2014/30/EU – on the harmonisation of the laws of the Member States relating to electromagnetic compatibility:
  - EN 50270:2015
- in relation to Directive 2014/35/EU – on the harmonisation of the laws of the Member States relating to the making available on the market of electrical equipment designed for use within certain voltage limits:
  - EN 60335-1:2012
- in relation to directive 2011/65/EU – on the restriction of the use of certain hazardous substances in electrical and electronic equipment
  - EN IEC 63000:2018

This declaration of conformity is issued under the sole responsibility of the manufacturer.

This EU Declaration of Conformity becomes not valid in case of product change or rebuild without manufacturer's permission.

Gliwice, 04.05.2022

(Name and Signature)
Managing Director
Aleksander Pachole

Notes

Reliable and Innovative Gas Detection & Safety Systems

Atest Gaz A. M. Pachole sp. j.
Spokojna 3, 44-109 Gliwice

tel.: +48 32 238 87 94
fax: +48 32 234 92 71
e-mail: contact@atestgaz.pl

For more details on our devices and other products and services offered by us, visit:

www.atestgaz.pl/en